USN 1 R V E C

RV College of Engineering®
Mysore Road, RV Vidyaniketan Post,
Bengaluru - 560059, Karnataka, India

NBA Accredited (UG - 6 Years)

Department of Electronics & Communication Engineering

Date: 08/01/2025	**Test 3**	**Max. Marks:50**
Semester: III	**UG**	**Duration: 90 min**
Course: Analysis and Design of Digital Circuit with HDL		**Code: EC234AI**

Part B				
Sl.	Questions	M	BT	C
1.	Develop the state diagram of a circuit that detects the following sequence: 1011010. The detector must assert output 'z=1' when the sequence is detected.(With	10	4	4
2.	Explain the operation of 4-bit universal shift register with the help of neat diagram for the following conditions and develop the Verilog code for the same. S_0 S_1 Operation 0 0 No change 0 1 Shift Left 1 0 Shift Right 1 1 Parallel load	10	4	3
3a.	Explain the working of 6-bit Johnson counter and also write the Verilog code for the same.	5	3	3
b.	With a neat block diagram explain the status register used in ALU of a processor. Demonstrate with an example, for overflow detection when adding two signed numbers. (Assume 8 bit ALU)	5	2	2
4a.	Design an arithmetic circuit with one selection variable and two data inputs A and B. When s=0 the circuit has to perform the addition operation F=A+B. When	6	3	3
b.	What is scratch pad memory? Explain	4	1	1

5.	Design an arithmetic and logic circuit with three selection variables S2S1S0 that generate the following operations. Draw the logic diagram of one typical stage.	10	4	4

Arithmetic Operations					Logical Operations			
S2	S1	S0	Cin=0	Cin=1	S2	S1	S0	Cin=X
0	0	0	F=A	F=A+1	1	0	0	OR
0	0	1	F=A+B	F=A+B+1	1	0	1	XOR
0	1	0	F=A-B-1	F=A-B	1	1	0	AND
0	1	1	F=A-1	F=A	1	1	1	Complement

Marks Distribution	Particulars		CO1	CO2	CO3	CO4	L1	L2	L3	L4	L5	L6
	Test	Max Marks	4	5	21	20	4	5	11	30	-	-

Q No	Scheme and Solutions	
	PART A	
	1. 00010101 2.1110 3.1010110 4.6 clock pulses 5.b 6.0X64 7.n 8.	2 1 1 1 1 2 1 1
	PART B	

1.	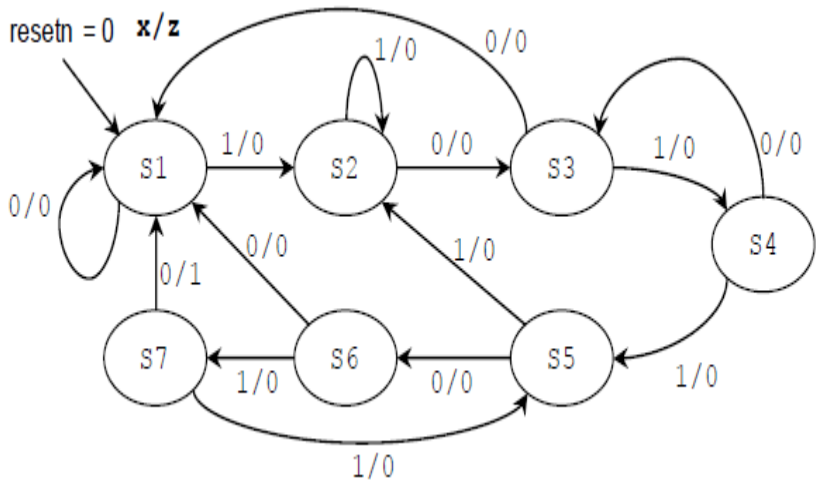 ---4M Code-----4M Test bench----2M	10

2. 10

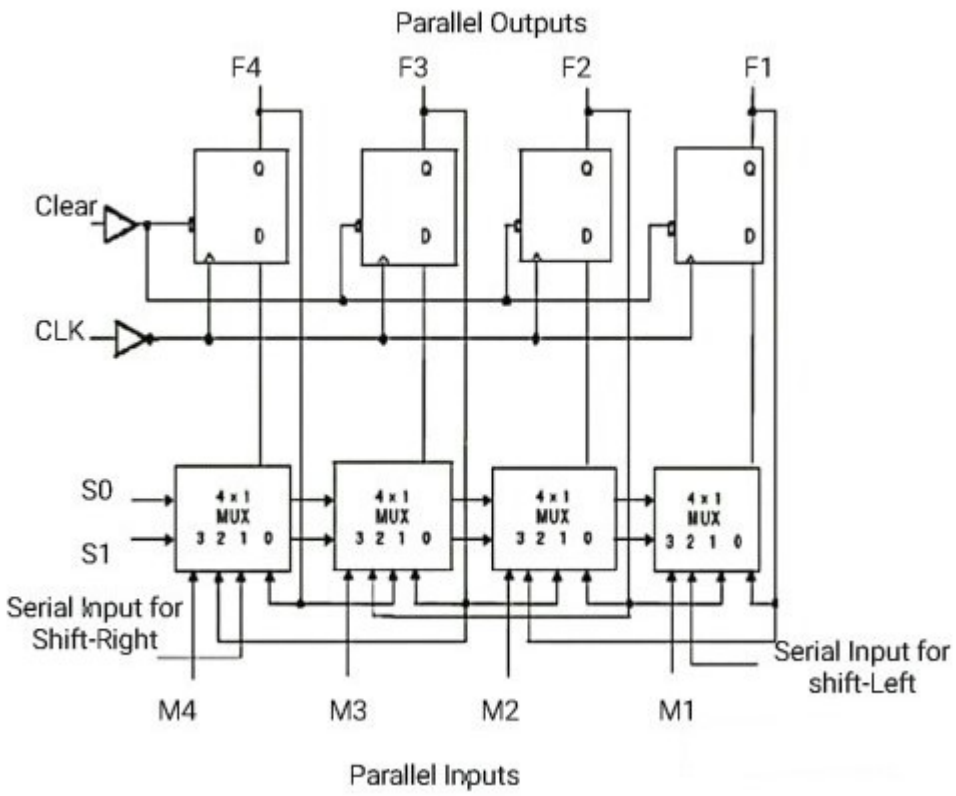

Circuit and explain the working-----6M

Code---4M

```
module Universalshiftregister(  input clk, input clrb, input [3:0] D, input SDL, input
SDR,
                                input [1:0] S,  output reg [3:0]

Q  ); always @ ( posedge clk, negedge clrb)

if (~clrb)
Q<=4'b0000;
else
case (S)
2'b00:Q
<=Q;
2'b01: Q<={Q[2:0],SDL};
2'b10: Q<={SDR,Q[3:1]};
2'b11: Q<=D;
default:
Q<=4'b0000;
```

3a. 6

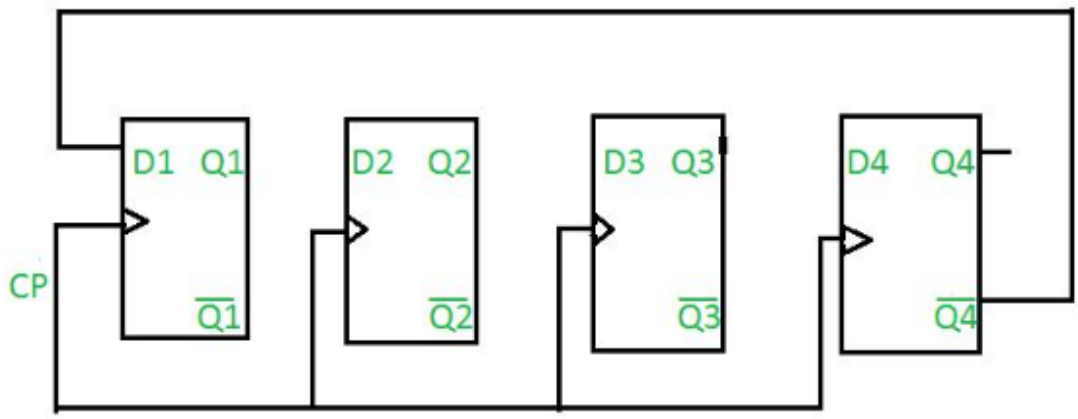

6-bit Johnson counter----3M
Verilog code---3M

```
module johnson_counter( Clock,
Reset, Count_out
);
input Clock; input Reset;
output [3:0] Count_out;
reg [3:0] Count_temp;
always @(posedge(Clock) or Reset) begin
if(Reset == 1'b1) begin
Count_temp <= 4'b0000; end
else if(Clock == 1'b1) begin
Count_temp <= {Count_temp[2:0],~Count_temp[3]}; end
end
assign Count_out = Count_temp;
endmodule
```

b.	The status register (also called the flag register) in an Arithmetic Logic Unit (ALU) is a special-purpose register that holds various flags or indicators reflecting the results of the last operation performed by the ALU. These flags provide important information about the outcome of an operation, enabling the processor to make decisions during program execution. Example: Let us add two 8-bit signed numbers: • $A = 65$ (0100 0001 in binary) • $B = 70$ (0100 0110 in binary) **Addition** $$A + B = 65 + 70 = 135$$ In binary: $$0100\ 0001 + 0100\ 0110 = 1000\ 0111$$ **Overflow Detection** Overflow is detected by examining the **carry into the sign bit** (MSB) and the **carry out of the sign bit**: • Carry into MSB: **0** • Carry out of MSB: **1** If these two carry bits differ, the overflow flag (V) is set. 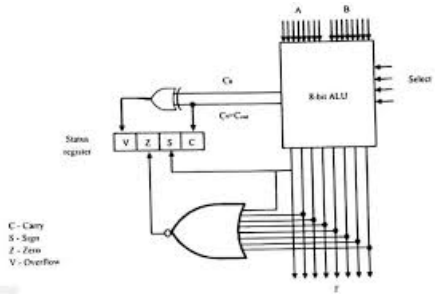	4

4a.	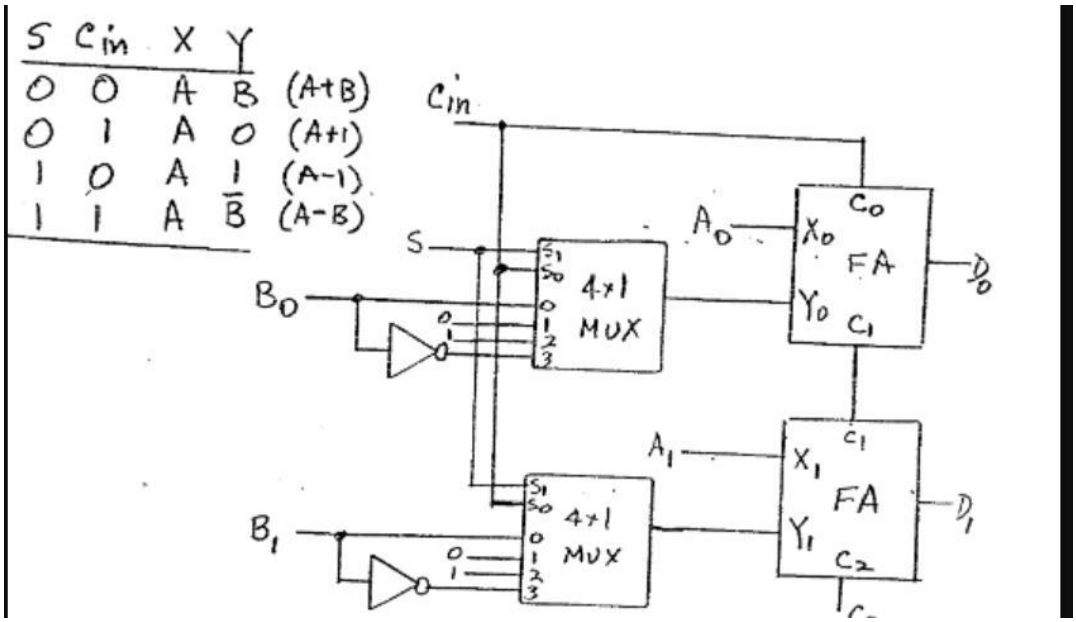	6
b	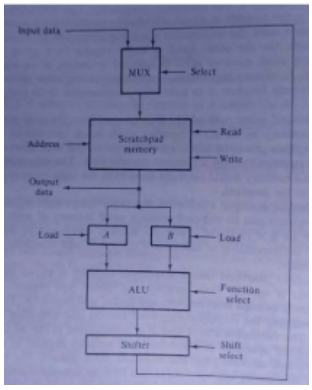 Scratch pad memory diagram and explanation---4M	4

5	$X_i = A_i + s_2 s_1' s_0' B_i + s_2 s_1 s_0' B_i'$ $Y_i = s_0 B_i + s_1 B_i'$ $Z_i = s_2' C_i$ Derive the above equations for Arithmetic unit and logic unit------7M 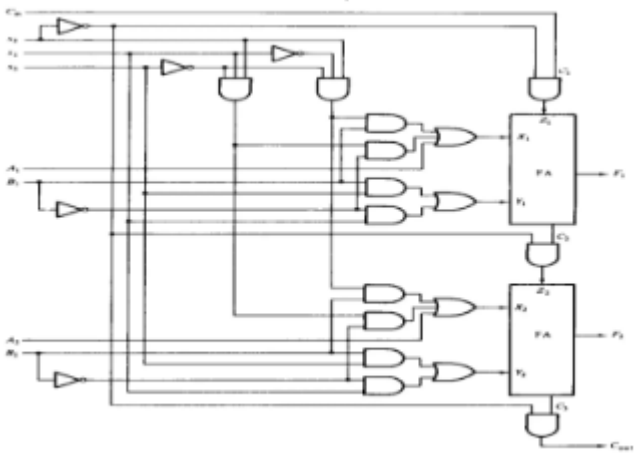 ---3M	10